SPECIFICATION	
NUMBER OF PHASES: 4	ROTOR INERTIA: 82 g-cm^2 (0.44 oz-in^2) NOM
STEPS PER REVOLUTION: 200	DETENT TORQUE: 244.7 g-cm (3.39 oz-in) MIN
STEP ANGLE: 1.8°	INSULATION CLASS: B
STEP TO STEP ACCURACY: 0.09° [1], [2]	BEARINGS: ABEC 3, DOUBLE SHIELDED
POSITION ACCURACY: 0.09° [1], [3]	TEMP. RISE: 80°C MAX. [9]
HYSTERESIS: N/A%	OPERATING TEMP. RANGE: -20 TO +50°C
SHAFT RUNOUT: 0.03 mm T.I.R. MAX	STORAGE TEMP. RANGE: -30 TO +70°C
RADIAL PLAY: 0.02 mm MAX (0.5 kg RADIAL LOAD)	RELATIVE HUMIDITY RANGE: 15 TO 85%
END PLAY: 0.08 mm MAX (0.5 kg AXIAL LOAD)	WEIGHT: 360 g (12.6 oz) APPROXIMATE

CONNECTION	RESISTANCE PER PHASE (ohm ±10%) [7]	INDUCTANCE PER PHASE (mH ±20%) [8]	RATED CURRENT (Amp)	HOLDING TORQUE (Nm MIN) [1]	HOLDING TORQUE (oz-in) [1]
BI-POLAR SERIES	6.6	12.8	0.85	0.55	77.89
BI-POLAR PARALLEL	1.7	3.2	1.70	0.55	77.89
UNI-POLAR	3.3	3.2	1.20	0.39	55.23

NOTES, UNLESS OTHER WISE SPECIFIED:

[1] MEASUREMENTS MADE AT RATED CURRENT IN EACH PHASE.
[2] BETWEEN ANY TWO ADJACENT FULL STEP POSITIONS.
[3] MAXIMUM ERROR IN 360°.
4. HIPOT 500 VAC, 60Hz FOR ONE MINUTE.
[5] LEADS: 8, 26 AWG, 7 STRAND MIN. UL AND CSA APPROVED. UL 1430 OR UL 3265
6. INSULATION RESISTANCE: 100 MEGOHMS MIN AT 500 VDC.
[7] AS MEASURED ACROSS EACH PHASE.
[8] AS MEASURED ACROSS EACH PHASE USING AN A.C. INDUCTANCE BRIDGE AT 1KHz.
[9] AS MEASURED BY THE CHANGE IN RESISTANCE METHOD, WITH RATED CURRENT APPLIED TO 2 PHASES: WITH MOTOR AT REST.
[10] ADD "D" TO END OF PART NUMBER IF DOUBLE SHAFT IS REQUIRED. DOUBLE SHAFT REQUIRES ADDED HOLES FOR ENCODER OPTION.
11. ROTOR AND STATOR LAMINATED CONSTRUCTION.
12. THIS MOTOR IS MANUFACTURED IN COMPLIANCE WITH CURRENT EU RoHS DIRECTIVE.
[13] MOTOR LABEL TO INCLUDE AMP LOGO, AMP WEBSITE ADDRESS, "RoHS" COMPLIANCE LOGO, AMP P/N, "MADE IN (COUNTRY)", AND DATE CODE.

REVISIONS

ECO #	REV.	DESCRIPTION	DATE	APPROVED
5976	A	INITIAL RELEASE	8/28/09	JEFF. K
6036	B	REVISE SPECS	12/10/09	JEFF. K
6090	C	STANDARDIZE ENCODER HOLES	3/10/10	JEFF. K
7247	D	ADDED UL TO LABEL	1/26/16	JEFF. K
7446	E	REVISED NOTE 10	6/6/16	JEFF. K
8209	F	DOCUMENT CLEAN UP	4/22/19	JEFF. K
8277	G	REMOVE ENCODER HOLES	7/3/19	JEFF. K
8675	H	RE-DRAW IN SOLIDWORKS, ENCODER HOLE DEPTH CHANGED	6/15/21	LEO. L

DRIVE SEQUENCE MODEL
BI-POLAR PARALLEL FULL STEP

CW ↓ / CCW ↑

STEP	ORG & BLK/WHT	BLK & ORG/WHT	RED & YEL/WHT	YEL & RED/WHT
1	+	-	+	-
2	-	+	+	-
3	-	+	-	+
4	+	-	-	+
1	+	-	+	-

CW (CLOCKWISE) AND CCW (COUNTER-CLOCKWISE) ROTATION
WHEN SEEN FROM THE FLANGE SIDE OF THE MOTOR

WIRING DIAGRAM

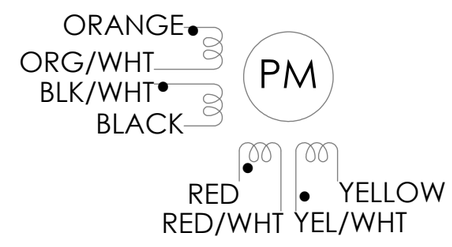

Applied Motion Products
A MOOG'S COMPANY

UNLESS OTHERWISE SPECIFIED:
DIMENSIONS ARE IN MILLIMETERS
TOLERANCES:
ANGULAR: ± 0.5
ONE PLACE DECIMAL ± 0.25
TWO PLACE DECIMAL ± 0.13
THIRD ANGLE PROJECTION
MATERIAL
FINISH
DO NOT SCALE DRAWING

	NAME	DATE
DRAWN	ALAN. N	6/15/20
CHECKED	YANN. L	6/15/21

COMMENTS:

TITLE:
STEPPER MOTOR OUTLINE

SIZE	DWG. NO.	REV
B	HT17-275	H

SCALE: 1:1 | WEIGHT: | SHEET 1 OF 2

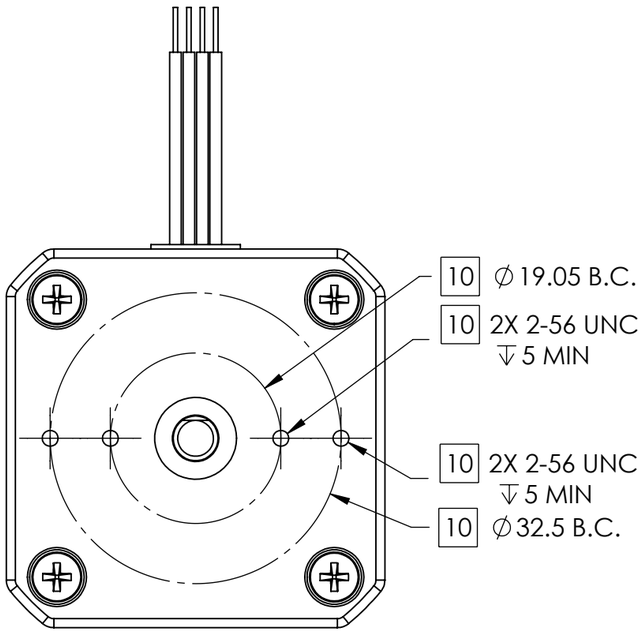

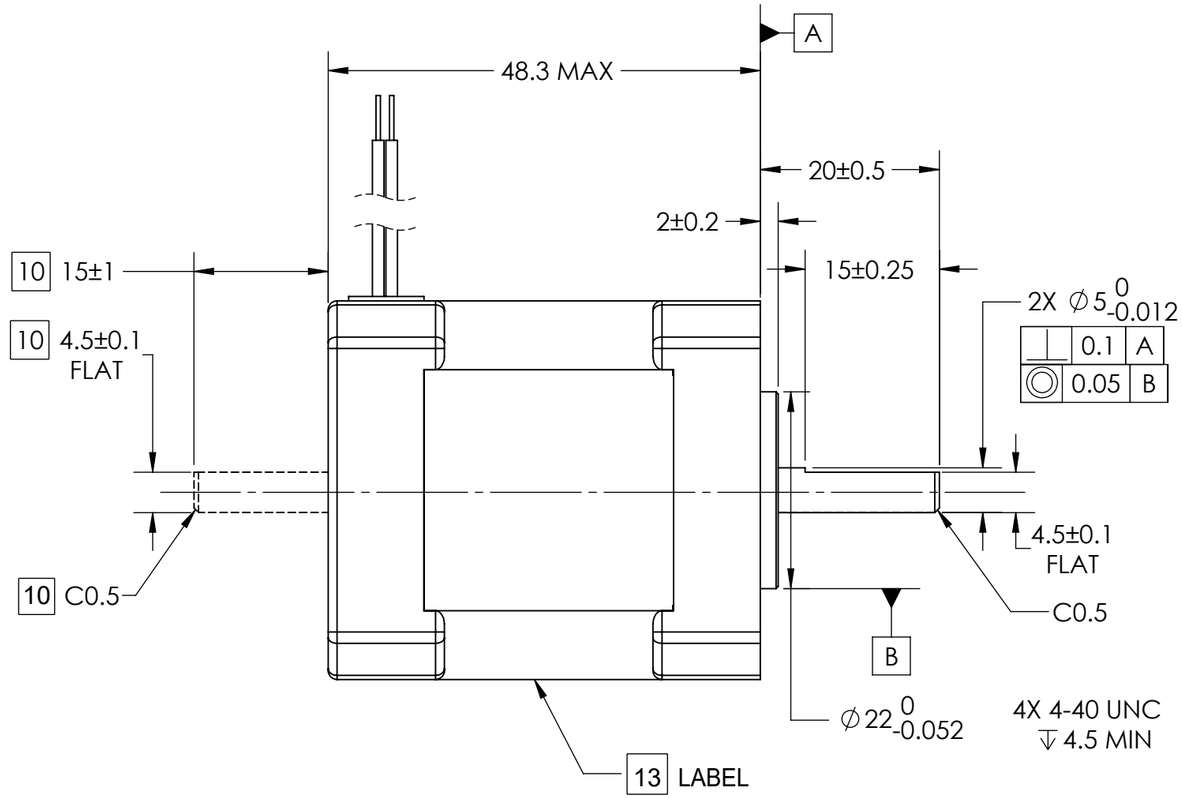

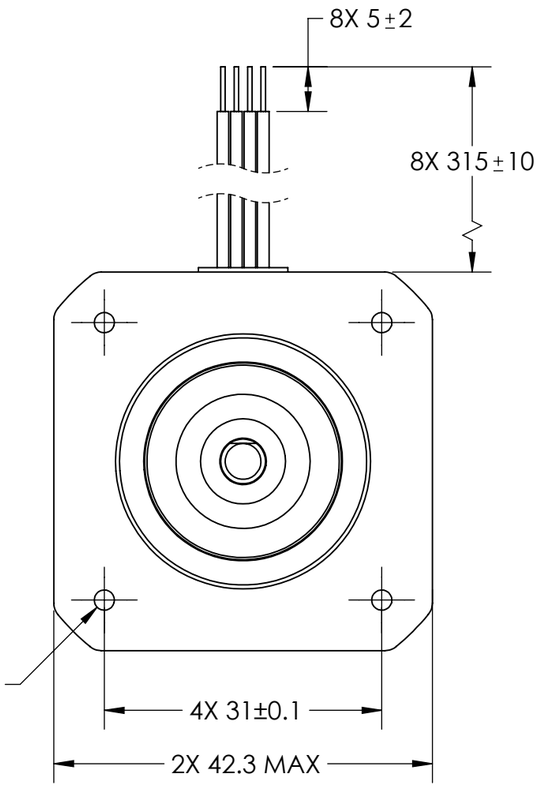

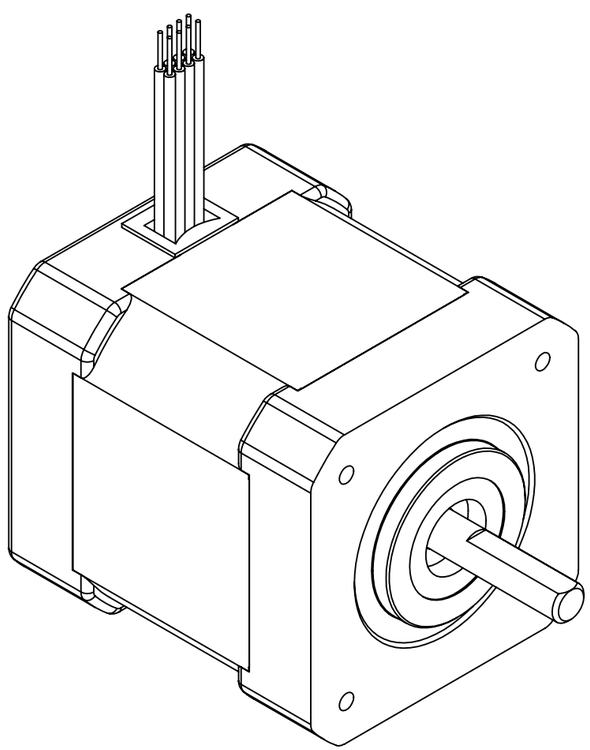

Applied Motion Products
A MOONS' COMPANY

UNLESS OTHERWISE SPECIFIED:
DIMENSIONS ARE IN MILLIMETERS
TOLERANCES:
ANGULAR: ± 0.5
ONE PLACE DECIMAL ± 0.25
TWO PLACE DECIMAL ± 0.13
THIRD ANGLE PROJECTION

MATERIAL

FINISH

DO NOT SCALE DRAWING

	NAME	DATE
DRAWN	ALAN. N	6/15/20
CHECKED	YANN. L	6/15/21

COMMENTS:

TITLE:

STEPPER MOTOR OUTLINE

SIZE	DWG. NO.	REV
B	HT17-275	H

SCALE: 1:2 | WEIGHT: | SHEET 2 OF 2